ALP375x



ALP1230x

STANDARD EQUIPMENT

220V/380V power supply to the cage
Air breathing line from turntable to the cage
Auto levelling basket
Automatic stabilization
Cage hook (max 500 kg / 1102 lbs)
Cage multifunction pin
Cage rotation
Colored LED display on all four control stations
Dead man pedal both on the cage and on turntable controls
Fully electronic proportional hydraulic controls driven by canBUS system
Hands free intercom system ground/cage
Hoist hook on main boom (max 2000 kg / 4409 lbs)
Memory function
Multilanguage display messages
One click auto-closing function
Remote management and diagnostic software
Smooth movements, no flapping with brakes and ramps
Stable aluminium rescue ladder with automatic opening of articulated boom ladder handrail
Telescopic aluminium water line (diameter 100 mm / 4 in)
Ultrasonic anti collision system for cage and cab protection
Variable outreach management
Water sprinkler for cage protection
Wheelchair easy inlet on the cage

STANDARD COMPLIANCE

UNI EN 1777
UNI EN 1846
CE (european certification)



PERFORMANCES

	metric	US
Working height	37,5 m	123 ft
Horizontal outreach	24 m	78 ft 9 in
Up and over clearance	30 m	98 ft 5 in
Downreach	- 5 m	-16 ft 5 in
Lift capacity	500 kg	1102 lbs
Minimum GVW	26 T	57320 lbs
Water capacity	3800 l/min	1004 GPM (US liquid)
Operating wind speed	14 m/s	46 fps

MEASUREMENTS

		metric	US
	Foldable front platform on the cage	1360x520 mm	4 ft 5 in x 1 ft 9 in
A	Rescue cage size	2000x1000x1100 mm	6 ft 7 in x 3 ft 4 in x 3 ft 7 in
B	Height*	3850 mm	12 ft 8 in
C	Length*	10250 mm	33 ft 7 in
D_1	Width* outriggers in	2500 mm	8 ft 3 in
D	Width* outriggers out	5500 mm	18 ft
E	Departure angle* (minimum)	12°	22%

** Depending on chassis*

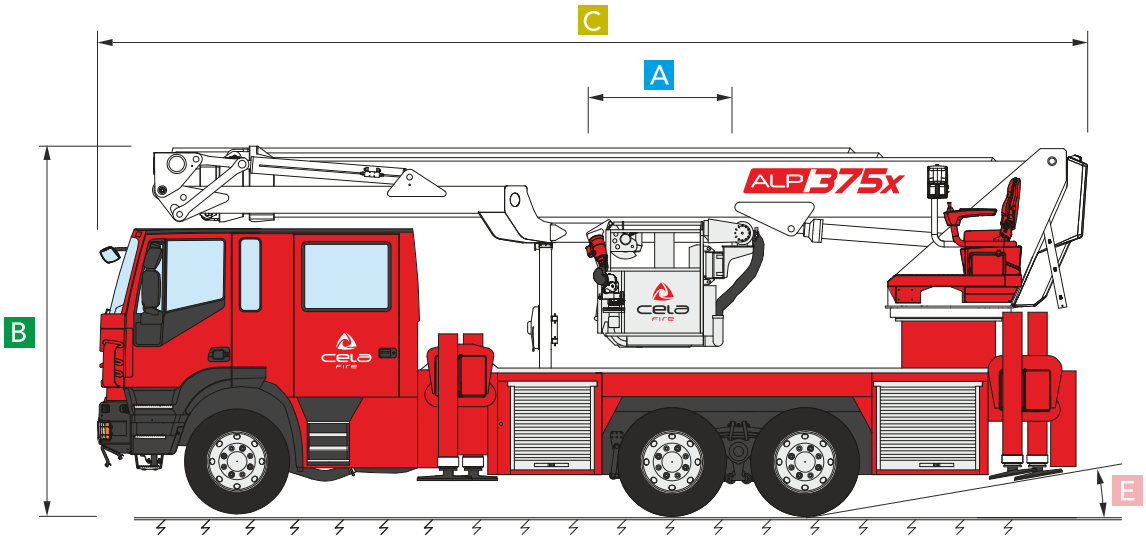

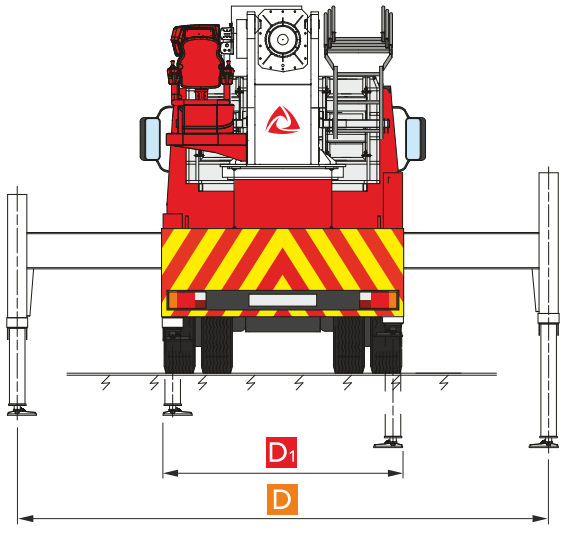

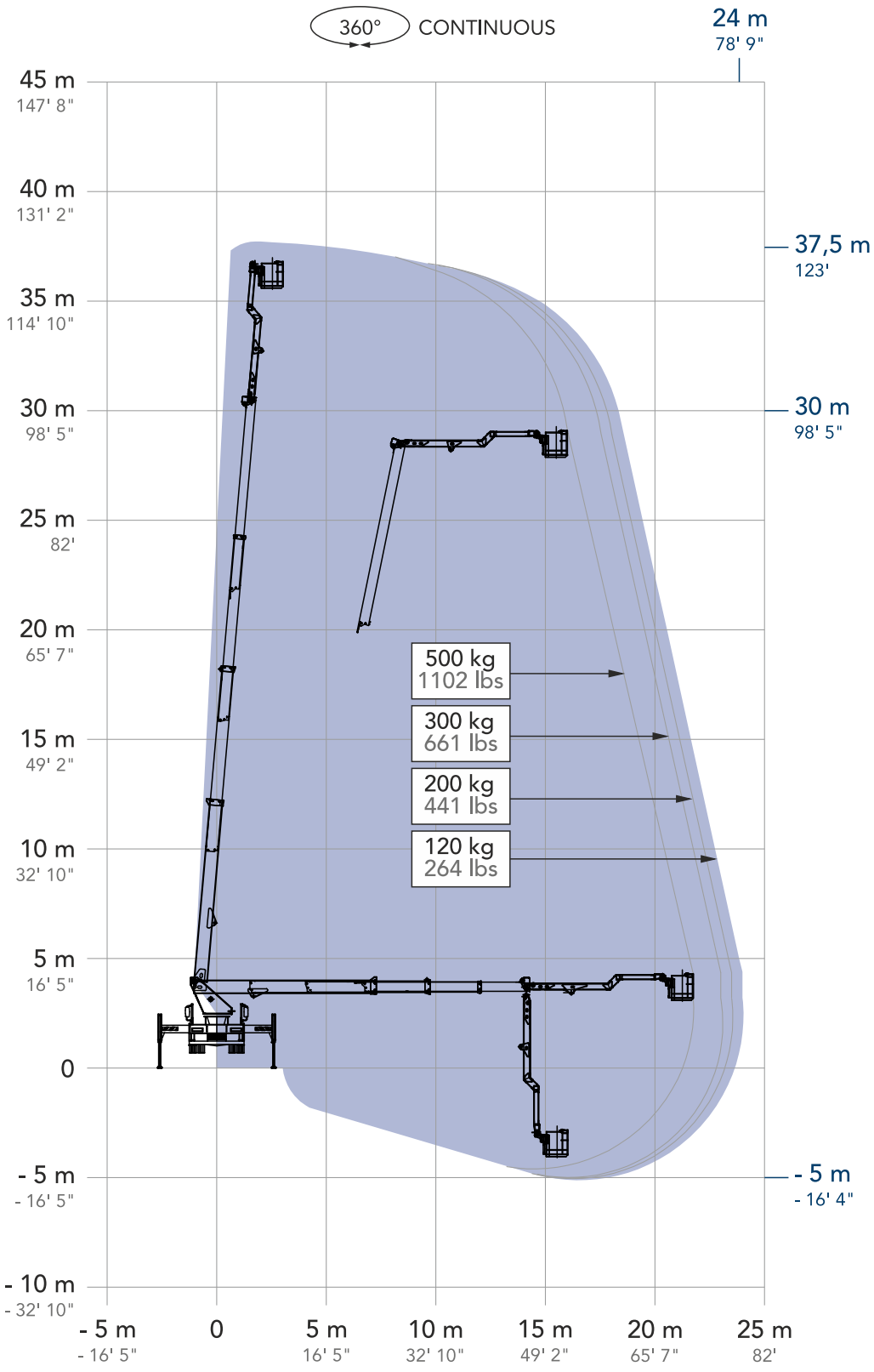
360° CONTINUOUS
24 m
78' 9"
45 m
147' 8"
40 m
131' 2"
37,5 m
123'
35 m
114' 10"
30 m
98' 5"
30 m
98' 5"
25 m
82'
20 m
65' 7"
500 kg
1102 lbs
300 kg
661 lbs
200 kg
441 lbs
120 kg
264 lbs
15 m
49' 2"
10 m
32' 10"
5 m
16' 5"
0
- 5 m
- 16' 5"
- 5 m
- 16' 4"
- 10 m
- 32' 10"
- 5 m
- 16' 5"
0
5 m
16' 5"
10 m
32' 10"
15 m
49' 2"
20 m
65' 7"
25 m
82'

CELA ALSO MAKES



CELA s.r.l.

Via Iseo, 5/7/9
25045 Castegnato (BS) - ITALY
Tel. +39 030 9884084
info@cela.it

CELA PLATFORMS
NORTH AMERICA, INC.

1351 Gordon Highway, suite B
Augusta, GA 30901
USA
salesusa@celaplatforms.com

QUALITY SYSTEM CERTIFICATION DNV ISO 9001

CE

Standard Compliances

ANSI/SAIA A92.20

CSA B354.6

UNI EN 280

Le dimensioni e le caratteristiche descritte negli schemi tecnici sono indicativi e sono suscettibili di variazioni senza preavviso. Il catalogo potrebbe non essere aggiornato alla data odierna, si invita a consultare il sito internet.

The dimensions and characteristics described in the technical drawings are indicative and are subject to change without notice. The catalog may not be up to date with today's date; please refer to the website.

Las dimensiones y características descritas en los esquemas técnicos son indicativas y están sujetas a cambios sin previo aviso.Es posible que el catálogo no esté actualizado a la fecha de hoy; por favor, consulte el sitio web.

Les dimensions et caractéristiques décrites dans les schémas techniques sont indicatives et susceptibles de modifications sans préavis. Le catalogue peut ne pas être à jour à la date d'aujourd'hui ; veuillez consulter le site web.

Die in den technischen Zeichnungen beschriebenen Abmessungen und Eigenschaften sind indikativ und können sich ohne Ankündigung ändern. Der Katalog ist möglicherweise nicht auf dem neuesten Stand; bitte schauen Sie auf der Website nach.

技术图纸中描述的尺寸和特性仅供参考，如有变更恕不另行通知。目录可能未更新至今日日期，请查阅网站。

www.celaplatforms.com
celasrlplatforms
cela.platforms
Cela Industry

laGraficheria_+39.392.3397531

rev 1 · 05/11/2026