

## STANDARD EQUIPMENT

- 220V/380V power supply to the cage
- Auto levelling basket
- Auto-jacking/turntable levelling function
- Cage hook (max 300 kg / 660 lbs)
- Cage multifunction pin
- Cage rotation
- Dead man pedal both on the cage and on turntable controls
- Double telescopic extension booms
- Fully electronic proportional hydraulic controls driven by canBUS system
- Hands free intercom system ground/cage
- Memory function
- One click auto-closing function
- Remote management and diagnostic software
- Smooth movements, no flapping with brakes and ramps
- Variable outreach management
- Water sprinkler for cage protection

## STANDARD COMPLIANCE

- UNI EN 1777
- UNI EN 1846
- CE (european certification)



## PERFORMANCES

| | metric | US |
|---|---|---|
| Working height | 22 m | 72 ft 2 in |
| Horizontal outreach | 14 m | 45 ft 11 in |
| Up and over clearance | 10 m | 32 ft 10 in |
| Downreach | - 5 m | - 16 ft 5 in |
| Lift capacity | 300 kg | 660 lbs |
| Minimum GVW | 5 T | 11023 lbs |
| Water capacity | 700 to 1000 l/min | 180 to 260 GPM (US liquid) |
| Operating wind speed | 12,5 m/s | 71 fps |

## MEASUREMENTS

| | | metric | US |
|---|---|---|---|
| | Foldable front platform | 1150x250 mm | 3 ft 9 in x 10 ft |
| A | Rescue cage size | 1800x830x1180 mm | 5 ft 11 in x 2 ft 7 in x 3 ft 11 in |
| B | Height* | 2470 mm | 8 ft 1 in |
| $C_1$ | Length* basket off | 7050 mm | 23 ft 2 in |
| C | Length* | 7880 mm | 25 ft 10 in |
| $D_1$ | Width* outriggers in | 2230 mm | 7 ft 4 in |
| D | Width* outriggers out | 3780 mm | 12 ft 5 in |
| E | Departure angle* (minimum) | 12° | 22% |

** Depending on chassis*

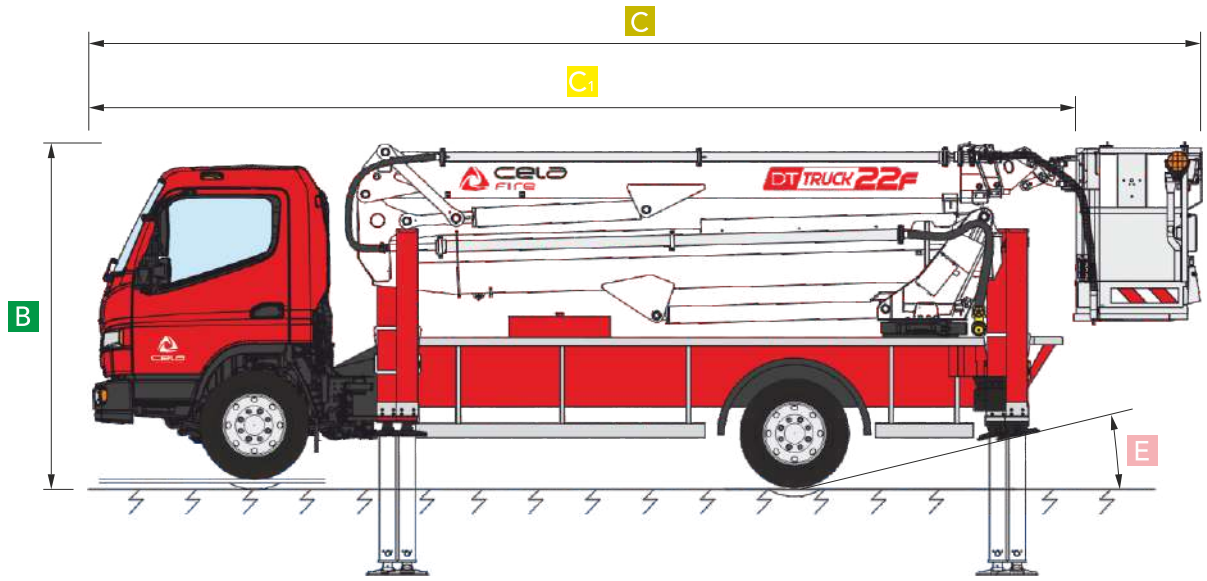


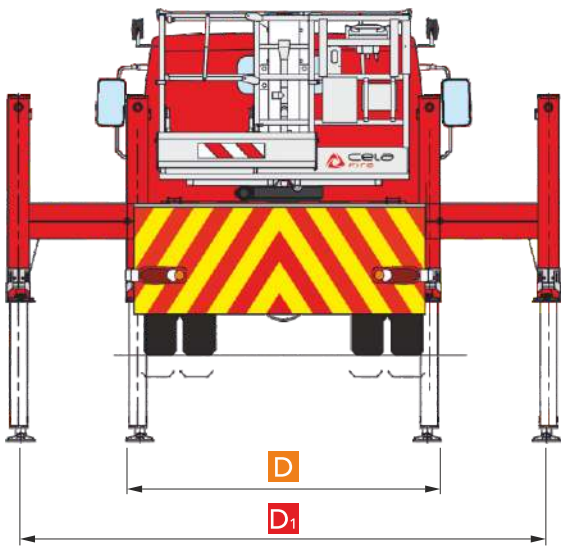

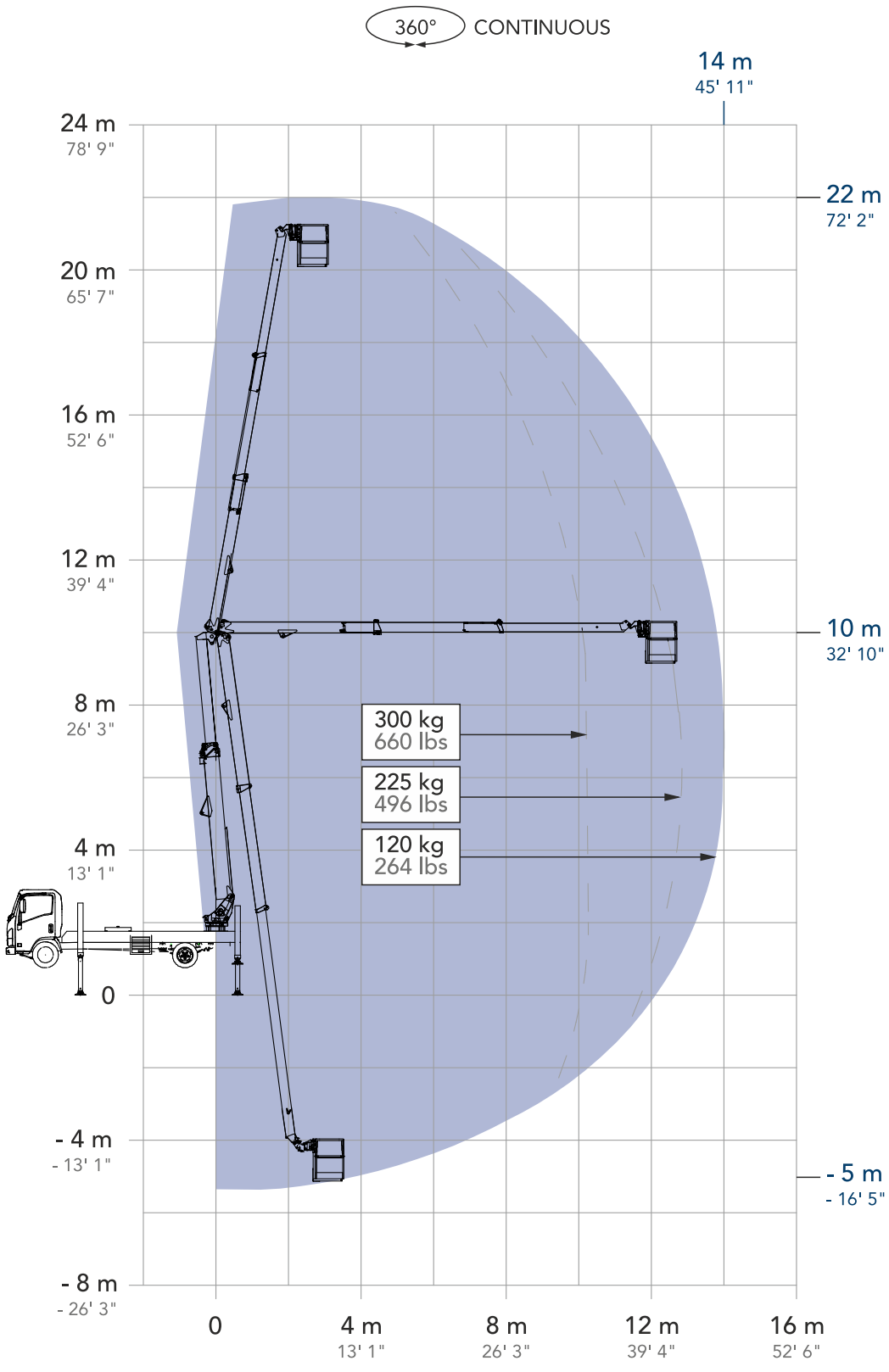
360° CONTINUOUS
14 m
45' 11"
24 m
78' 9"
22 m
72' 2"
20 m
65' 7"
16 m
52' 6"
12 m
39' 4"
10 m
32' 10"
8 m
26' 3"
300 kg
660 lbs
225 kg
496 lbs
120 kg
264 lbs
4 m
13' 1"
0
- 4 m
- 13' 1"
- 5 m
- 16' 5"
- 8 m
- 26' 3"
0
4 m
13' 1"
8 m
26' 3"
12 m
39' 4"
16 m
52' 6"

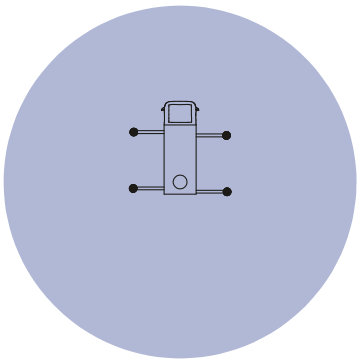

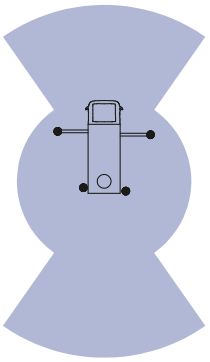

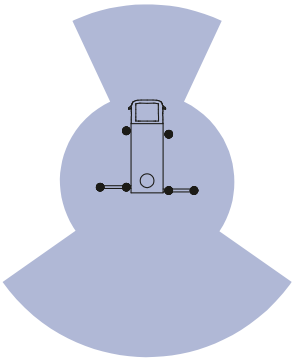

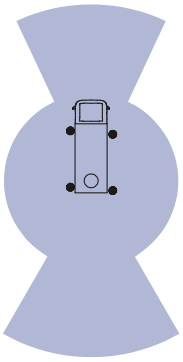

# CELA ALSO MAKES




CELA s.r.l.

Via Iseo, 5/7/9
25045 Castegnato (BS) - ITALY
Tel. +39 030 9884084
info@cela.it

CELA PLATFORMS
NORTH AMERICA, INC.

1351 Gordon Highway, suite B
Augusta, GA 30901
USA
salesusa@celaplatforms.com


QUALITY SYSTEM CERTIFICATION DNV ISO 9001

CE

Standard Compliances

*ANSI/SAIA A92.20*

*CSA B354.6*

*UNI EN 280*


Le dimensioni e le caratteristiche descritte negli schemi tecnici sono indicativi e sono suscettibili di variazioni senza preavviso. Il catalogo potrebbe non essere aggiornato alla data odierna, si invita a consultare il sito internet.

The dimensions and characteristics described in the technical drawings are indicative and are subject to change without notice. The catalog may not be up to date with today's date; please refer to the website.

Las dimensiones y características descritas en los esquemas técnicos son indicativas y están sujetas a cambios sin previo aviso.Es posible que el catálogo no esté actualizado a la fecha de hoy; por favor, consulte el sitio web.

Les dimensions et caractéristiques décrites dans les schémas techniques sont indicatives et susceptibles de modifications sans préavis. Le catalogue peut ne pas être à jour à la date d'aujourd'hui ; veuillez consulter le site web.

Die in den technischen Zeichnungen beschriebenen Abmessungen und Eigenschaften sind indikativ und können sich ohne Ankündigung ändern. Der Katalog ist möglicherweise nicht auf dem neuesten Stand; bitte schauen Sie auf der Website nach.

技术图纸中描述的尺寸和特性仅供参考，如有变更恕不另行通知。目录可能未更新至今日日期，请查阅网站。


www.celaplatforms.com
celasrlplatforms
cela.platforms
Cela Industry


laGraficheria_+39.392.3397531

rev 1 · 05/11/2026